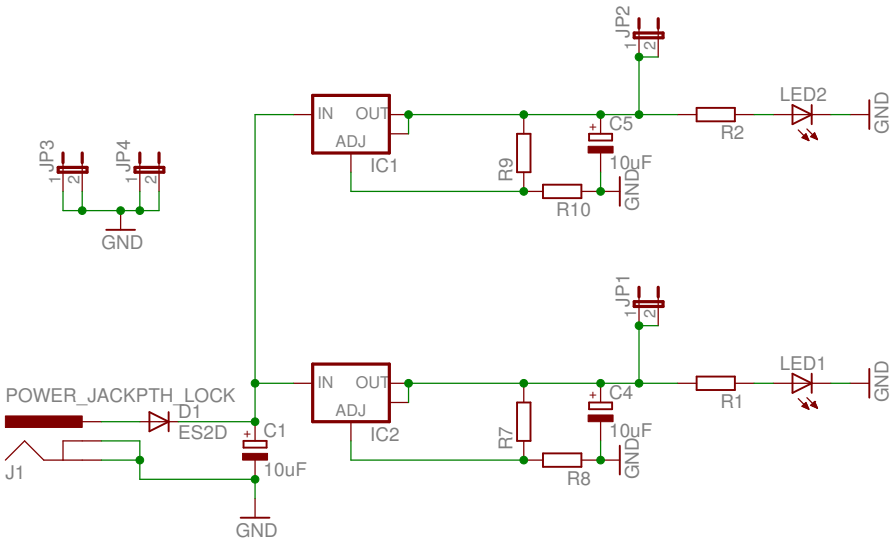
JP2
LED2
GND
IN
OUT
ADJ
IC1
C5
R2
R9
10uF
R10
GND
JP3
JP4
GND
JP1
LED1
GND
IN
OUT
ADJ
IC2
C4
R1
POWER_JACKPTH_LOCK
D1
ES2D
C1
R7
10uF
R8
GND
J1
10uF
GND