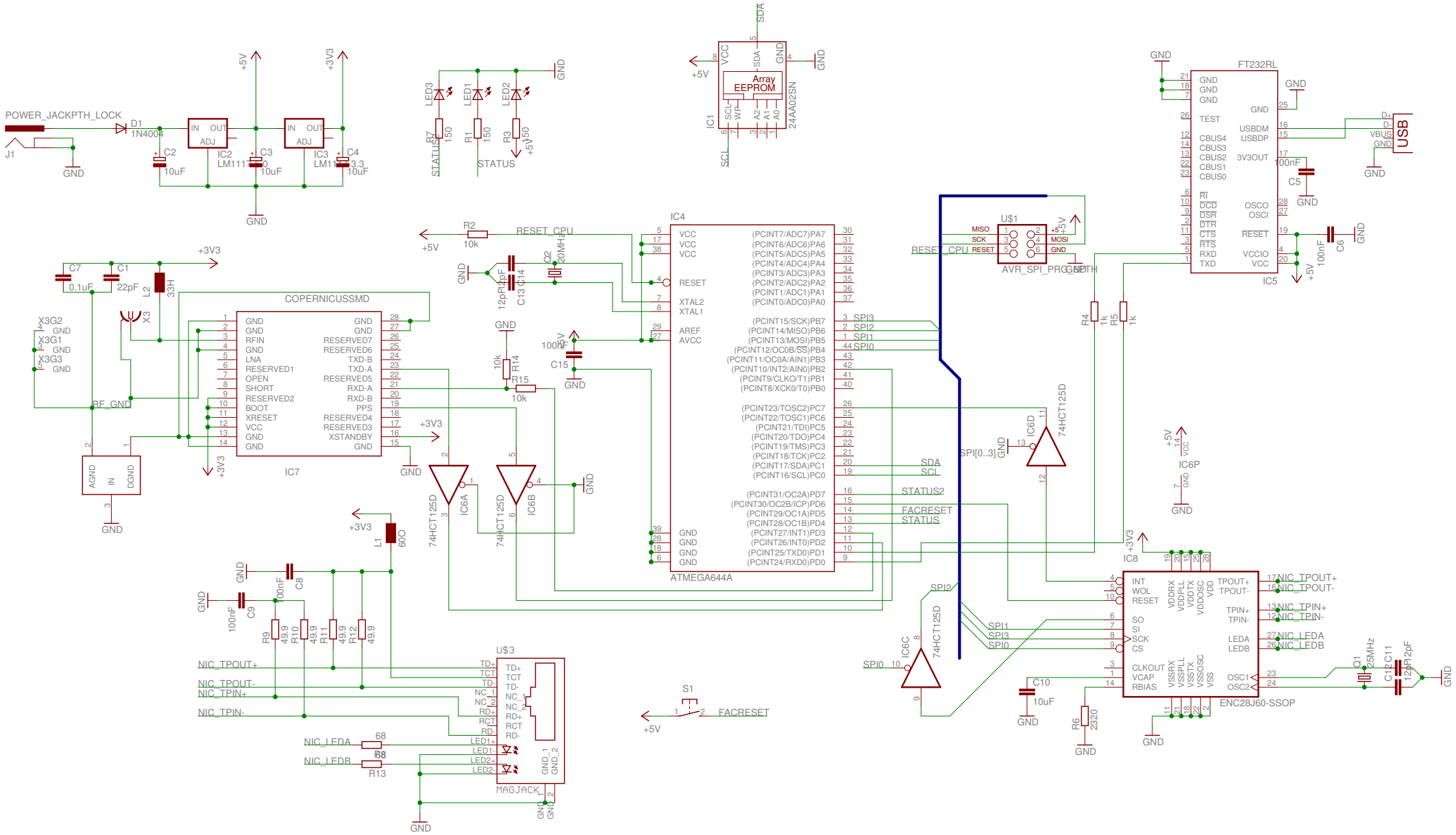

7/05/09 11:34 PM f=0.73 /home/dave2/eagle/NTP Routed/NTP Hardware SMD/ntp-final-smd.sch (Sheet: 1/1)